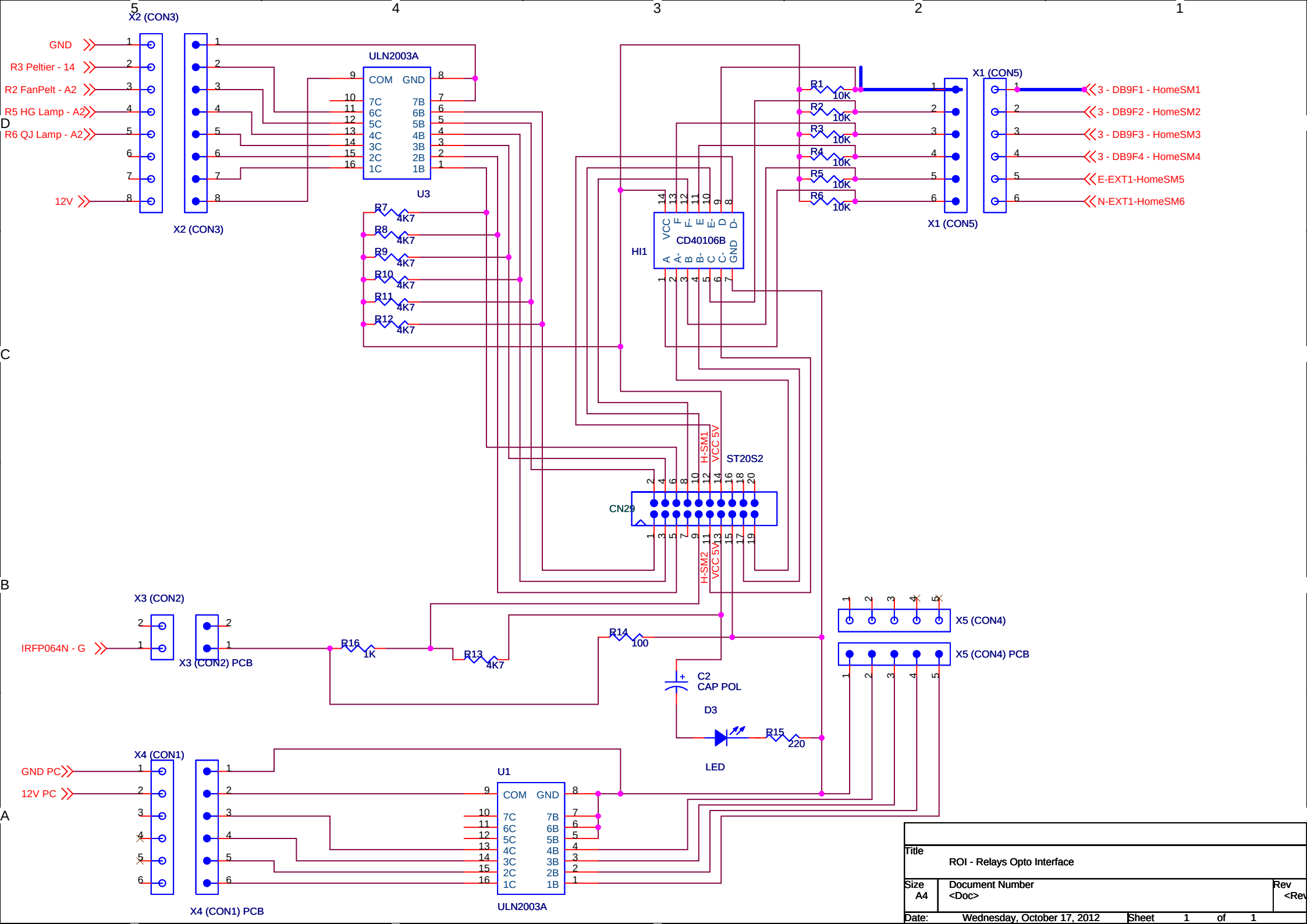

Title	ROI - Relays Opto Interface	
Size A4	Document Number <Doc>	Rev <Rev
Date: Wednesday, October 17, 2012	Sheet 1 of 1	